Crack Wing

Building Instructions

1. Glue (use Cyanoacrylate – CA – glue) both wing halves together.
2. Cut through the little bridges in the spar slots and CA glue the spars into the wing.
3. Center your servos and put the servo horns on, rectangular to the servo orientation. Install the adjustable links into the horns. With the wing in upside down position, install the servos and secure them with medium or thick CA or use your favorite method. The pushrods and horns are on the lower side of the model. There is a pre-cut slot for the control horns in the elevons. Cut it all the way through, using sharp hobby knife.
4. Install the Z-bends on the pushrods (1 x 140mm) – CA glue them on and cover the joint in shrink tube (4a-4c). Insert the Z-bends into the elevon horns. Deflect the elevon and insert the pushrod into the adjustable link in the servo arm. Neutralize the elevon and tighten the screw in the servo link. Cut away excess length of the pushrod.
5. Glue the reinforcement on the bottom of the wing.
6. Glue the reinforcement on the top of the wing (upper "fuselage" or "canopy"). CA glue the motor mount.
7. It makes sense to put the propeller on the motor first – the access is later somewhat limited. If you use flexible prop mount, use a very tight O-ring or maybe two instead of one. When you crash the wing, the prop tends to swing and bite into the foam – if it is attached in too flexible way. Remember that the prop is in pusher configuration and attach accordingly. Install the ESC and receiver. Cut through the indicated locations on the rudders and SFGs. According to the size of your servos, you may have to cut away some more foam from the rudders. Install (CA glue) the rudders into the wing. Install the SFGs. The Center of Gravity is recommended to be 13 mm back from the main spar.
   The battery should have a tight fit in the opening – you may modify the opening to your battery size. The default opening is for a typical 240 mAh 2s pack, which should balance the model well. Finally glue the lower fuselage.

   <u>Model Setup:</u>
   Less experienced pilots should adjust their elevon throws in such a way that maximum deflection of both aileron and elevator sticks move the elevon within the rudder cut-outs. Expert pilots may increase the throws in such a way that aileron or elevator stick deflection alone moves the elevon fully to the limit of the rudder cut-out. In such case you must limit the servo travel, to avoid mechanical collision and damage to your servo.

   <u>What you need for the build:</u>
   A workbench, preferably covered in polyethylene foil
   CA glue + kicker
   Sharp hobby knife
   Little cutters or hobby saw

Small Phillips screwdriver

RC Equipment:
2 servos, 4 to 6g
20 to 40W motor, 11 to 20g
6A ESC
2s 240 – 350 mAh
Micro receiver, 3 channel min.

We wish you many hours of fun with the Crack Wing.

Your RC Factory Team.

CrackWing - stavební návod

1.

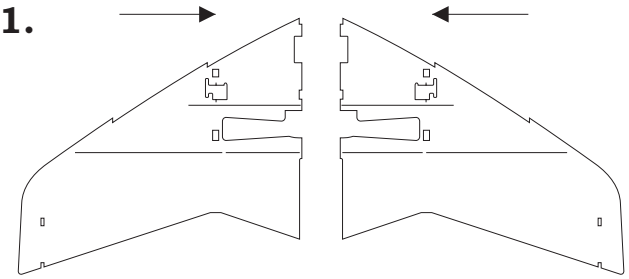

2.

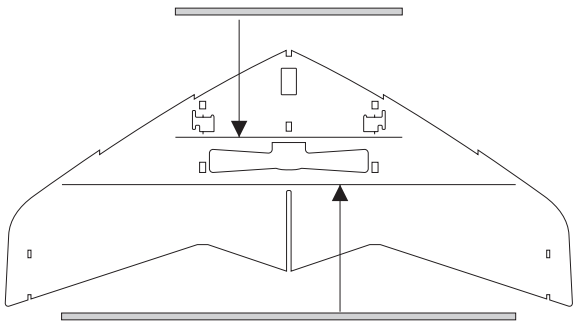

3.

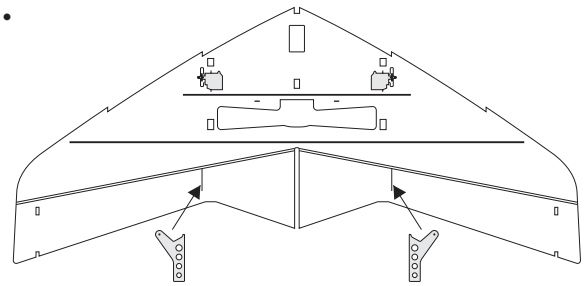

4.

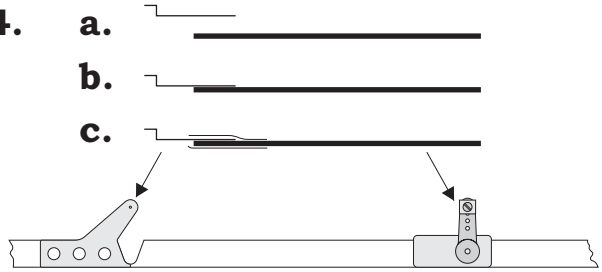

5.

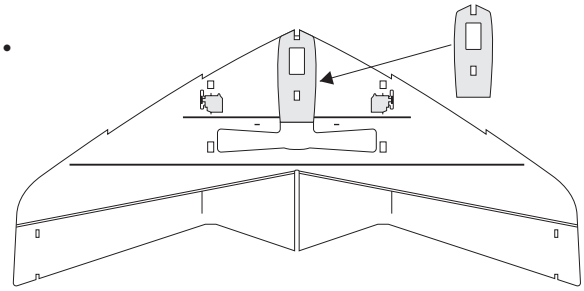

6.

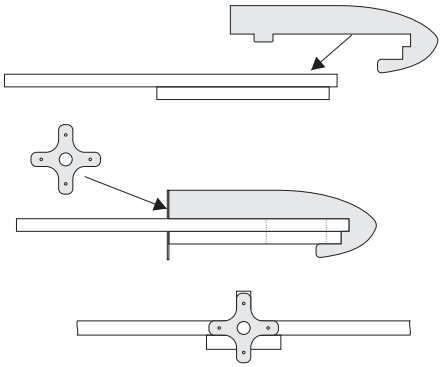
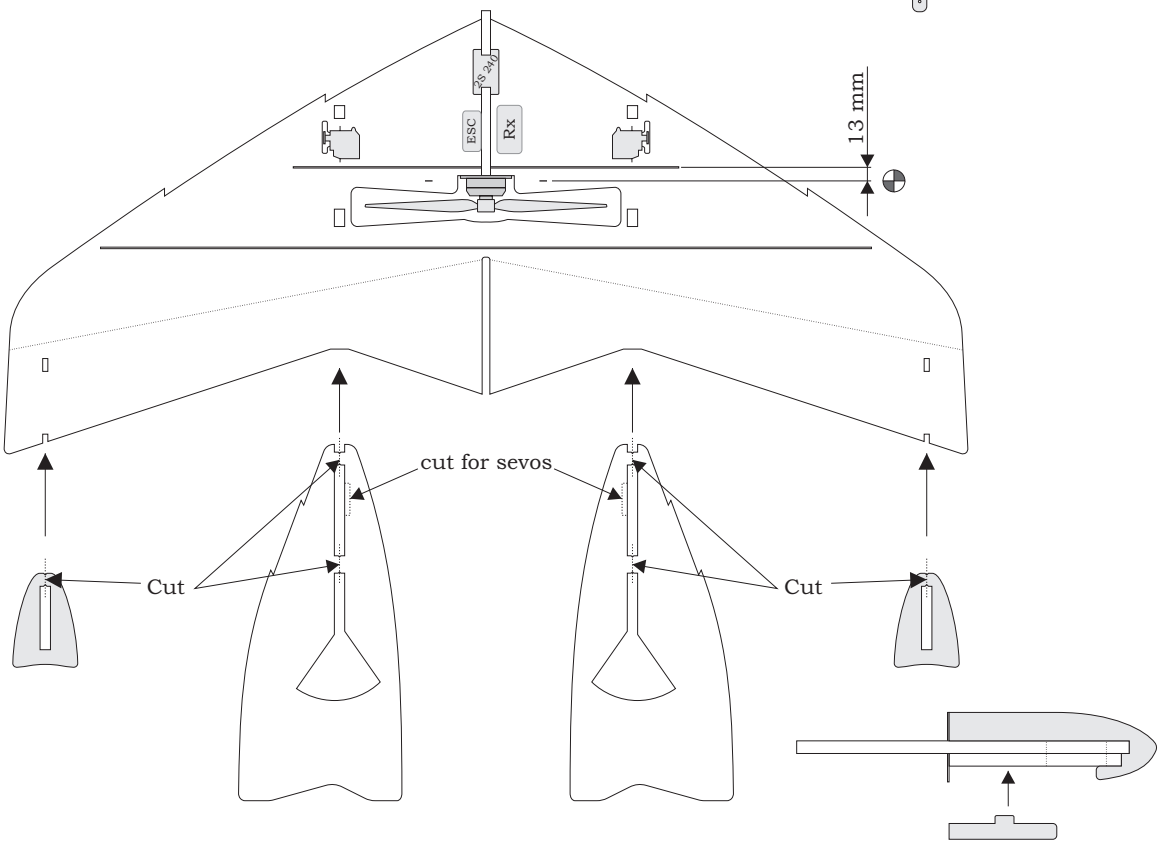
7.